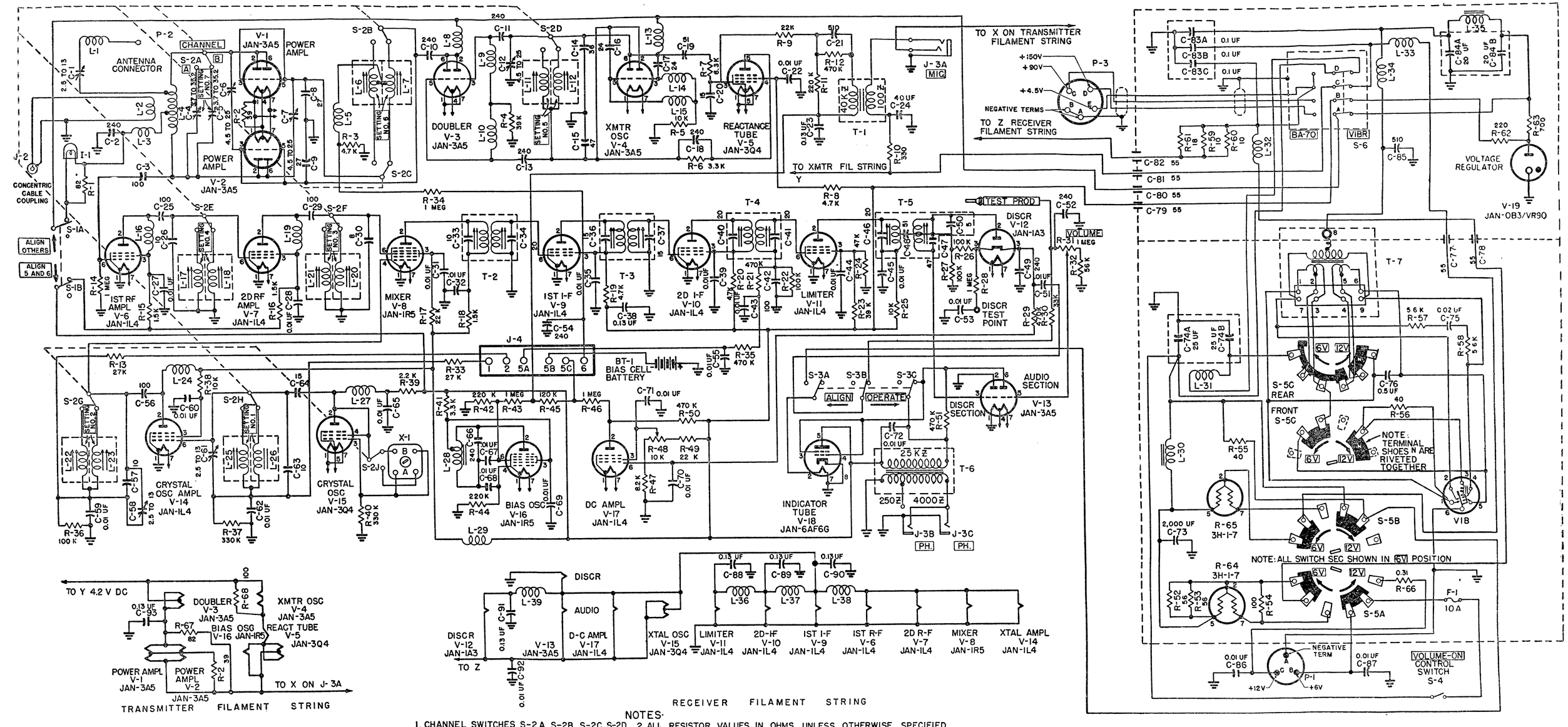

NOTES:

1. CHANNEL SWITCHES S-2A, S-2B, S-2C, S-2D, S-2E, S-2F, S-2G, S-2H, S-2J SHOWN IN B POSITION
2. ALL RESISTOR VALUES IN OHMS UNLESS OTHERWISE SPECIFIED.
3. ALL CAPACITOR VALUES IN UUF UNLESS OTHERWISE SPECIFIED.
4. C-77 THRU C-82 ARE FEED-THRU CAPACITORS.

Figure 62 (added). Receiver-Transmitter BC-1335-A, complete schematic diagram.

Courtesy AC5XP